Vegetable Slicer Cutter-mixer 5.5l/5.8qt, var. speed, 1300w, nema 5-15p

ITEM #

MODEL #

NAME #

SIS #

AIA #



602245 (DK55) Cutter Mixer, variable speed (300-3700 RPM). Supplied with 5,5 lt/5.8 quart removable stainless steel bowl with clear BPA-free lid, equipped with scraper. Fine serrated blade rotor and metal motor housing 1-1/3HP

Short Form Specification

Item No.

Cutter Mixer, variable speed (300-3700 RPM). Supplied with 5,5 lt/5.8 quart removable stainless steel bowl with clear BPA-free lid, equipped with scraper. Fine serrated rotor and metal motor housing 1-1/3HP

APPROVAL:

Main Features

- Emulsifier function (scraper) included as standard.
- All parts in contact with food are removable without the use of tools, completely dismountable and dishwasher safe.
- Pulse function to coarse chopping.
- Base fixed cover for a better handling.
- Delivered with:-5.8 qt stainless steel cutter bowl, transparent lid, scraper and microtoothed blade rotor.
- Capacity:-cutter mixer working capacity from 3.5 ounce (100 g) to 5.5 lbs (2.5 kg), for 50-100 meals per service.

Construction

- All blades (available on request) are made in stainless steel and dishwasher safe.
- Power: TK55 - 1.3 HP.
- Stainless steel bowl has a high chimney to ensure high productivity also when processing liquids (75% of the nominal capacity).
- IPX5 (IP55) flat panel touch-control, watertight panel.
- Compact and portable design.
- Asynchronous industrial motor with no brushes for high reliability and quiet functioning, stainless steel motor shaft.
- Improved ventilation system to manage smoothly heavy duty use.
- Reinforced feet to withstand the repeated handling of the unit.
- Food processing at 10 variable speeds: 300-3700 rpm.

Included Accessories

- 1 of Lid and bowl scraper for 5.8 qts (5.5 L) cutter mixer — PNC 650102
- 1 of Stainless steel bowl for 5.8 qts (5.5 L) cutter mixer — PNC 653590
- 1 of MICROTOOTHED BLADE ROTOR - 5,5L CUTTER-MIXER — PNC 653879

Optional Accessories

- Lid and bowl scraper for 5.8 qts (5.5 L) cutter mixer — PNC 650102 ❑
- Stainless steel bowl for 5.8 qts (5.5 L) cutter mixer — PNC 653590 ❑
- SMOOTH BLADE ROTOR - 5,5L CUTTER-MIXER — PNC 653878 ❑
- MICROTOOTHED BLADE ROTOR - 5,5L CUTTER-MIXER — PNC 653879 ❑
- MICROTOOTHED BLADE ROTOR (EMULSIONS) - 5,5L CUTTER-MIXER — PNC 653880 ❑

Vegetable Slicer Cutter-mixer 5.5l/5.8qt, var. speed, 1300w, nema 5-15p

Front

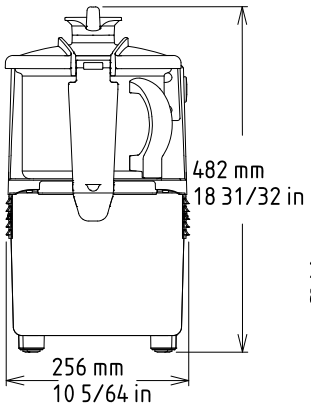

Side

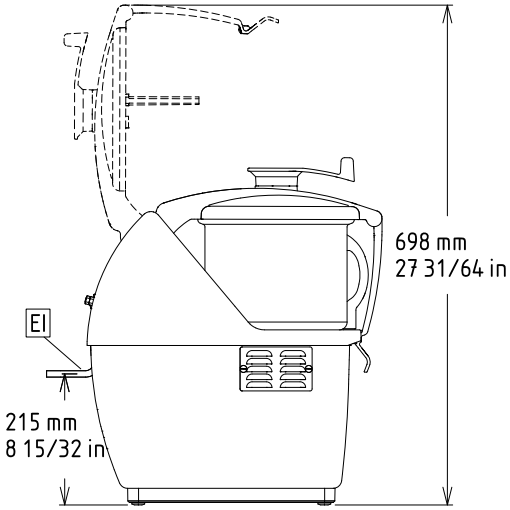

EI = Electrical connection

Top

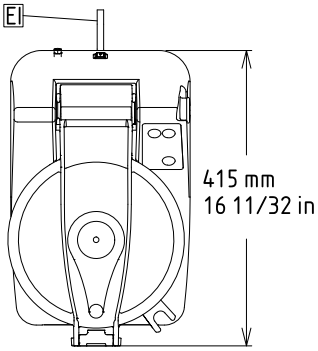

Electric

Supply voltage:	110-120 V/1N ph/60 Hz
Total Watts:	1.3 kW
Plug type:	USA NEMA 5-15P

Key Information:

External dimensions, Width:	10 1/16" (256 mm)
External dimensions, Depth:	16 5/16" (415 mm)
External dimensions, Height:	19 " (482 mm)
Shipping width:	11 13/16" (300 mm)
Shipping depth:	23 5/8" (600 mm)
Shipping height:	21 5/8" (550 mm)
Shipping weight:	57 lbs (26 kg)

The company reserves the right to make modifications to the products without prior notice. All information correct at time of printing.

2026.11.18